Rev_1.0

ANT1 (G850/900, W_B5/B8, LTE_B7/B28A/B28B)

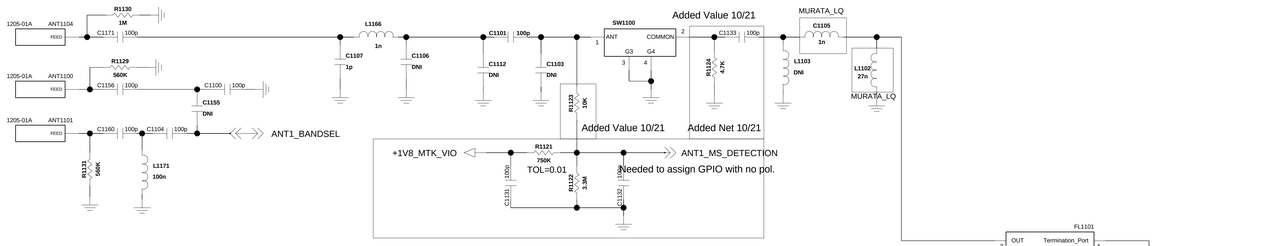

ANT2 (G1800/1900, W_B1, LTE_B3)

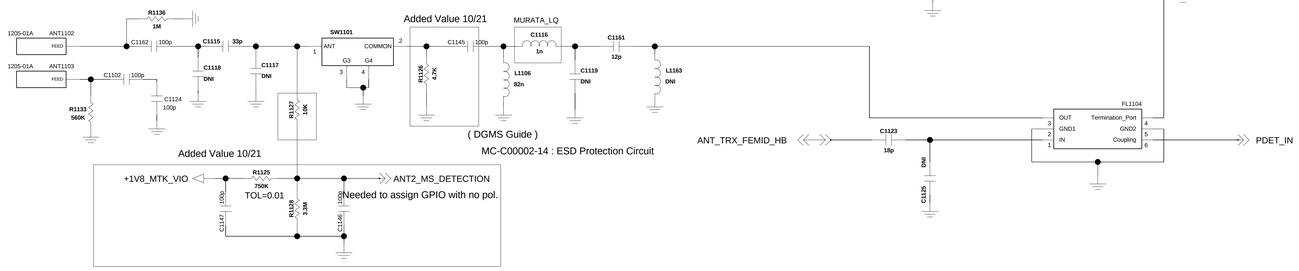

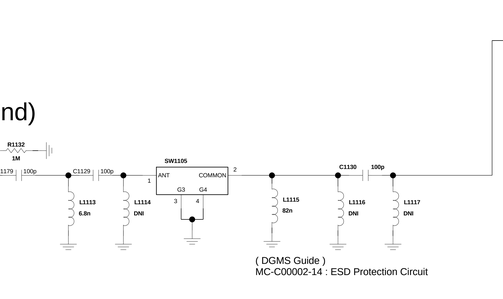

ANT3 (B3,B7 2nd)

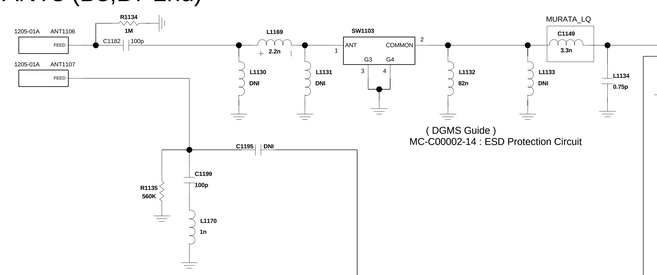

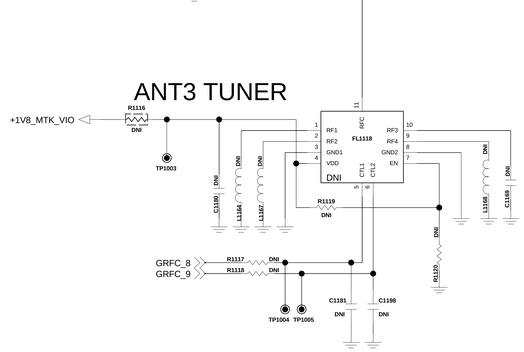

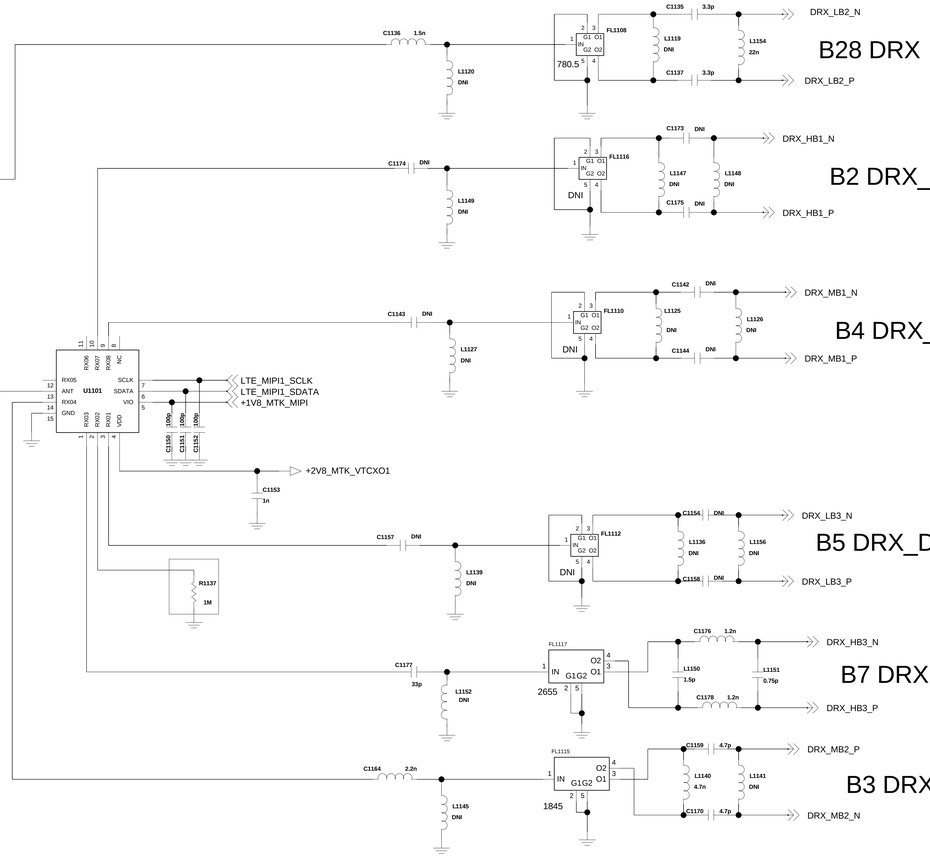

LGE Internal Use Only

LG Electronics			
TITLE: LG-H522y			
SIZE: A2	DWG NO: PDM NUMBER		REV: Rev
Drawn by: User Name	SHEET 1 OF 1	Date: Drawing Date	

< 1-x-2-1_ASM >

Rev_1.0

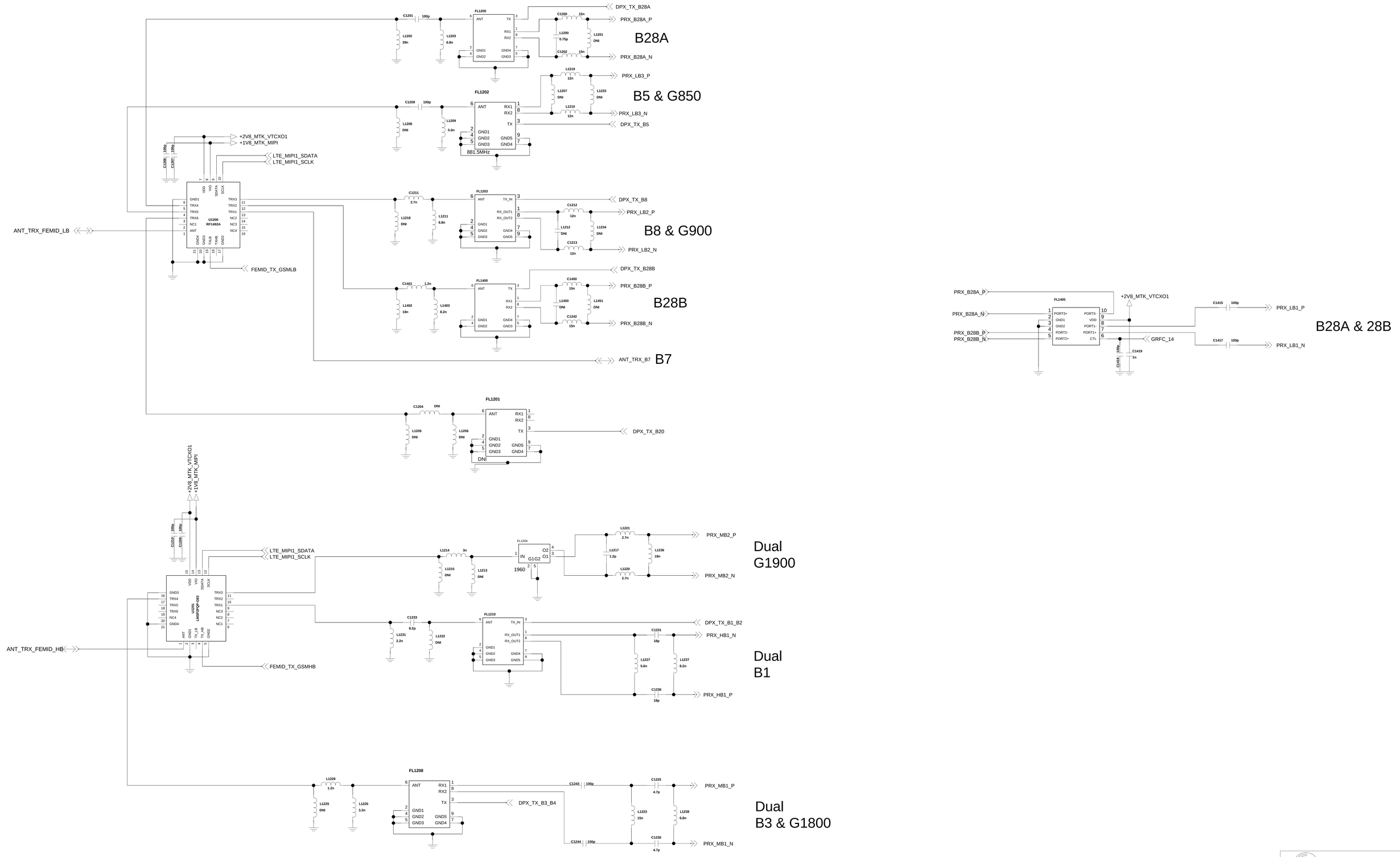

LGE Internal Use Only

LG Electronics	
TITLE	LG-H522y
SIZE A2	DWG NO PDM NUMBER
REV Rev	
Drawn by User Name	SHEET 1 of 1
Date Drawing Date	

<1-6-3-1_HCPA_SKY77621>

Rev_0.3

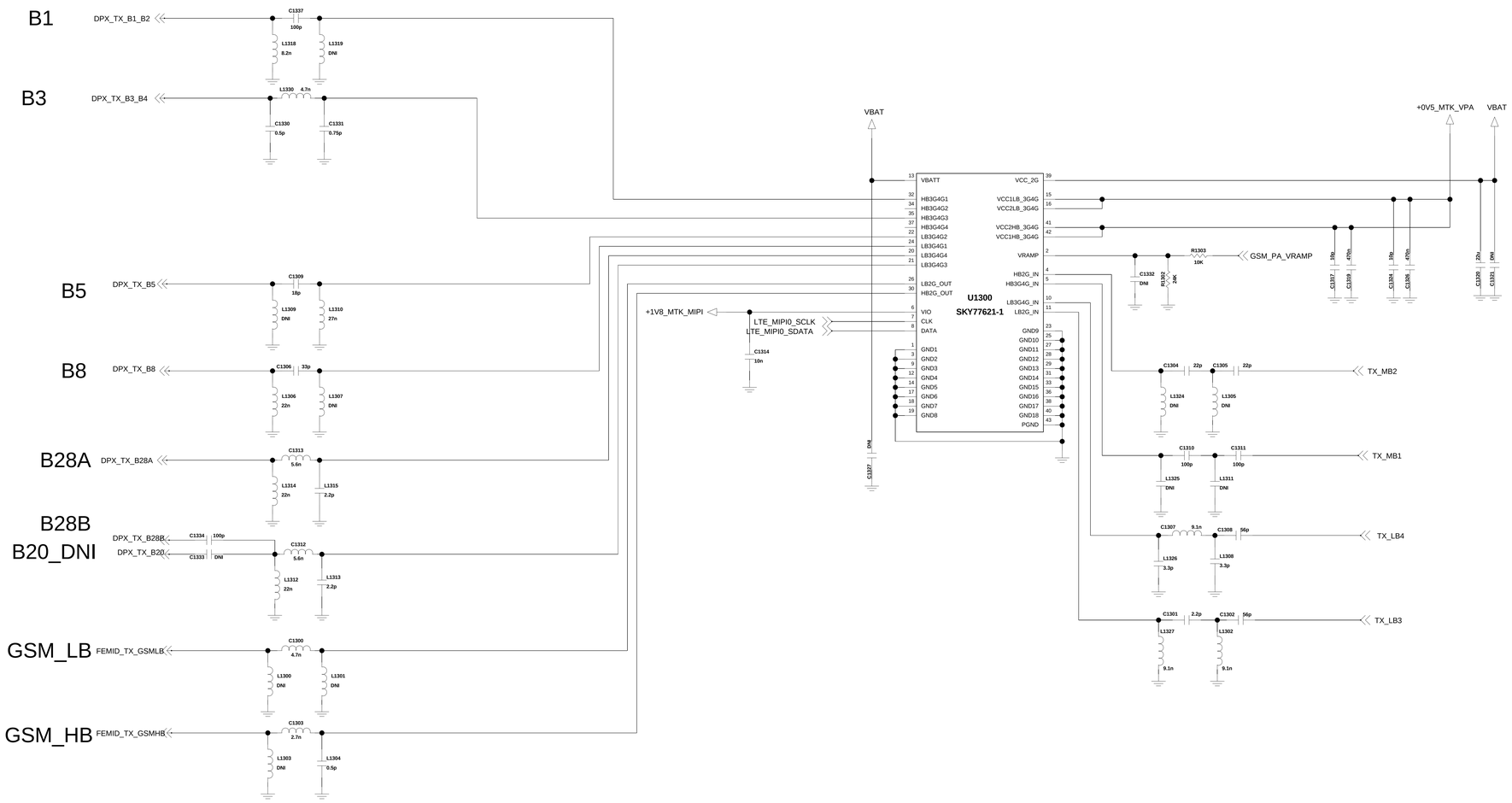

LGE Internal Use Only

LG Electronics			
TITLE	LG-H522y		
SIZE A2	DWG NO PDM NUMBER		REV Rev
DRAWN BY User Name	SHEET 1 of 1	Date Drawing Date	

<1-9-5-1_RFIC_MT6169>

Rev_0.4

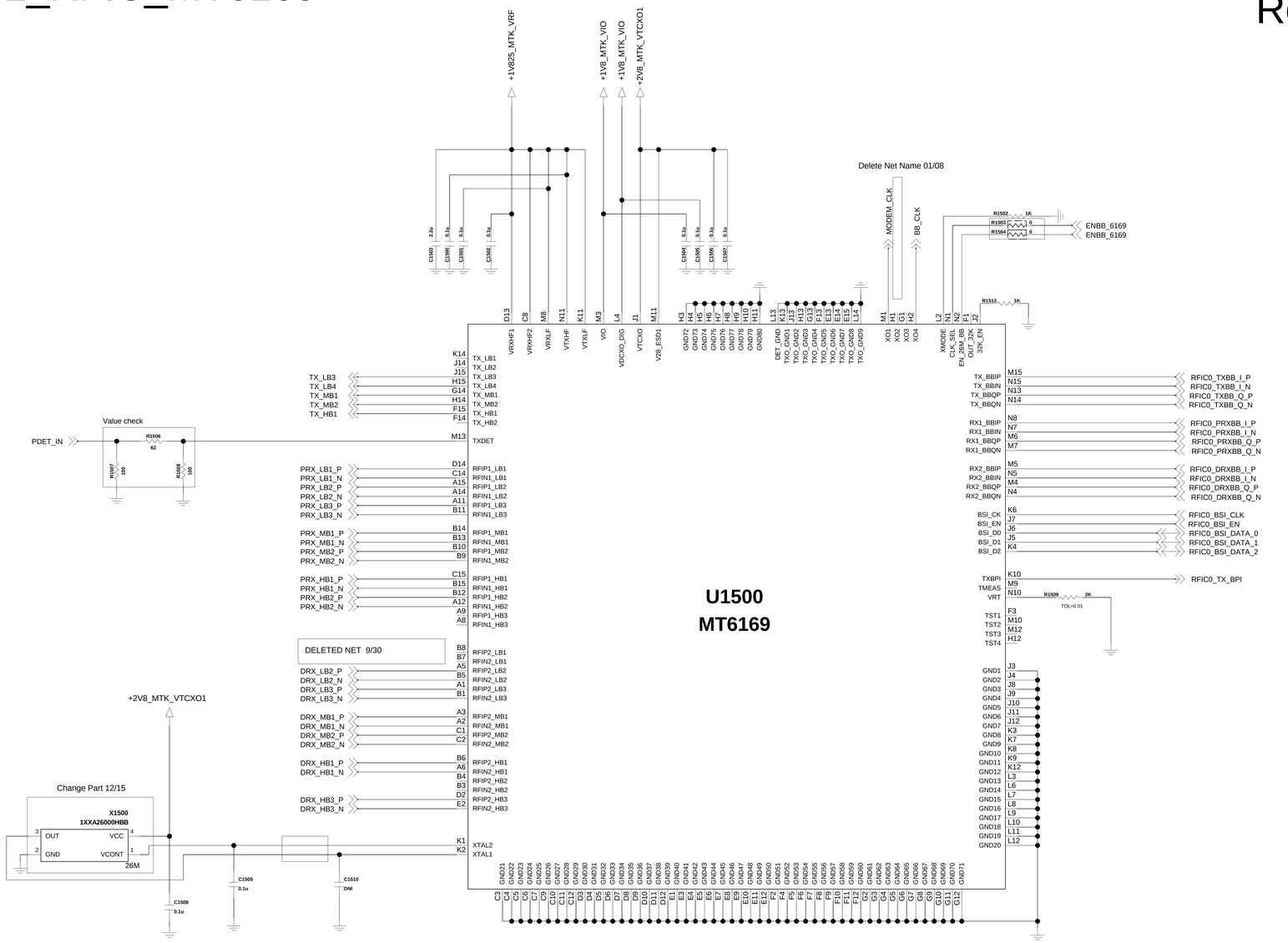

LG Electronics	
TITLE	LG-H522y
SIZE A2	DWG NO PDM NUMBER
REV Rev	
DRAWN BY User Name	SHEET 1 WTR1605L OF 20
Date Drawing Date	

< 1-2-6-1_B7 >

Rev_0.4

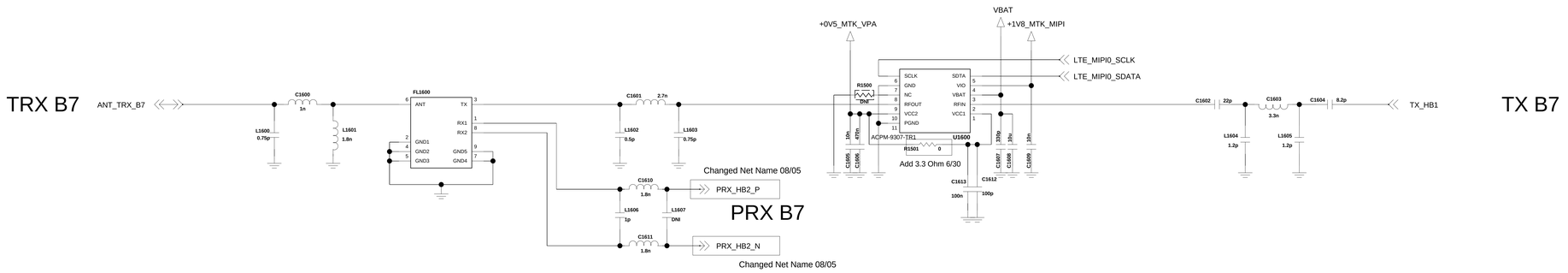

LGE Internal Use Only

	LG Electronics
TITLE	LG-H522y
SIZE A2	DWG NO PDM NUMBER
	REV Rev
DRAWN BY User Name	SHEET 1 OF 1
	Date Drawing Date

< 2-3-5-1-1_MT6732_DATA>

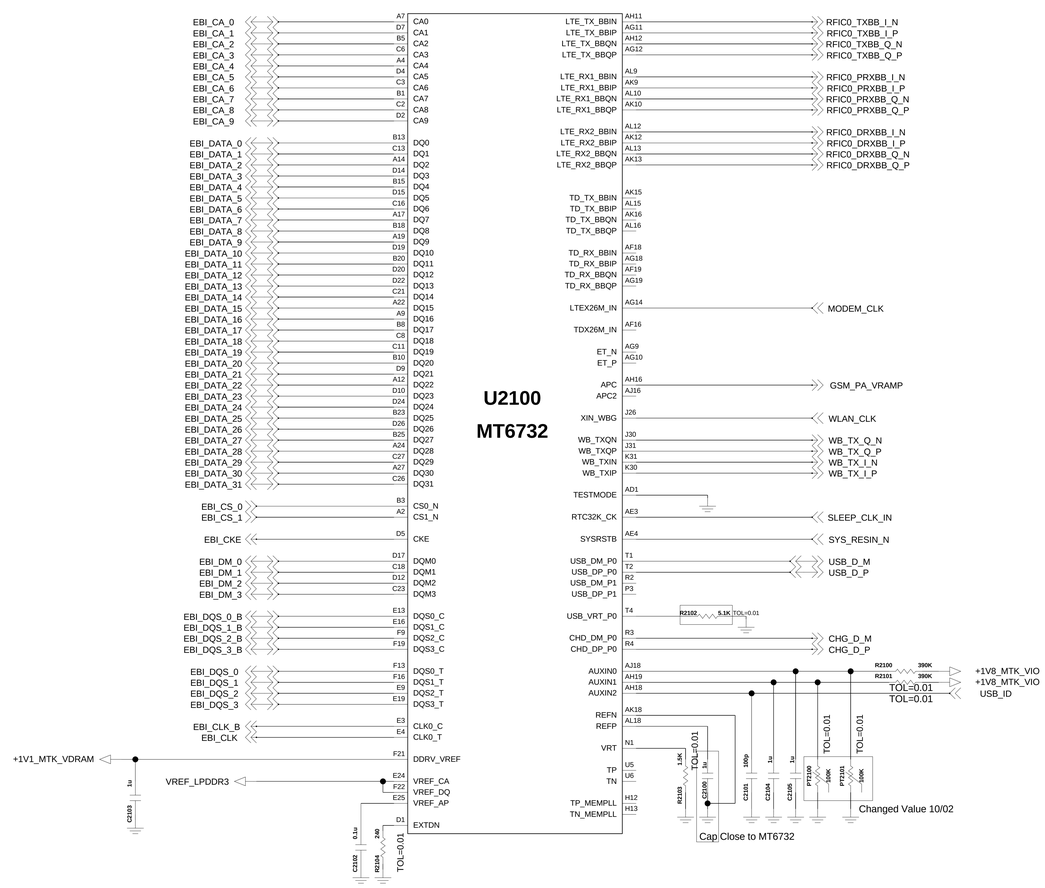

PCB REVISION_GPIO

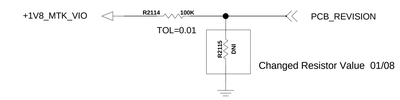

Revision	R2114	R2115	Level
0	100K	20K	0.300
A - Front 5M CAM	100K	27K	0.383
B	100K	39K	0.505
C	100K	51K	0.680
1.0	100K	DNI	1.800
1.1	DNI	100K	0.000

< 9-3-1_JTAG > Rev_0.4

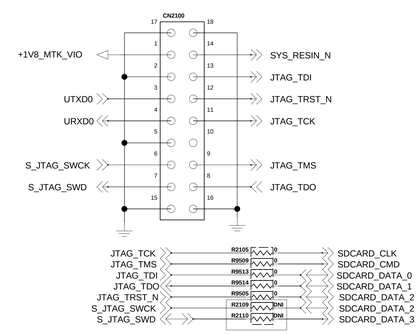

LGE Internal Use Only

LG Electronics

TITLE LG-H522y

SIZE A2 | DWG NO PDM NUMBER | REV Rev

DRAWN BY User Name | SHEET 2-1-1_MSM8974_DATA | DATE Drawing Date

< 2-3-5-1-2_MT6732_GPIO >

I2C Pull-Up

Changed 12/15

I2C_0 : Touch — +1V8_MTK_LCD_IO — R2200 4.7K, R2201 4.7K — TOUCH_I2C_SDA, TOUCH_I2C_SCL

I2C_1 : Sensors, NFC, Audio Sub System, LED DRIVER — +1V8_MTK_VIO — R2202 4.7K, R2203 4.7K — SENSOR0_I2C_SDA, SENSOR0_I2C_SCL

I2C_3 : Main CAM, VT CAM, B/L Booster, L/D — +1V8_MTK_VIO — R2206 4.7K, R2207 4.7K — CAM0_I2C_SDA, CAM0_I2C_SCL

Deleted 11/6

Connected JTAG : R2212, R2213 - 4.7K — AUDIO_DATA_MOSI, PMIC_SPI_CS — R2213 DNI, R2212 DNI, R2214 DNI, R2215 0 — +1V8_MTK_VIO

PCB_INDICATOR_0 — R2222 10K, R2223 DNI — +1V8_MTK_VIO
PCB_INDICATOR_1 — R2224 DNI, R2225 10K
PCB_INDICATOR_2 — R2226 10K, R2227 DNI
PCB_INDICATOR_3 — R2228 10K, R2229 DNI

F — R2204 10K, R2205 DNI
G — R2210 DNI
AR — R2211 DNI
Y — R2216 DNI
V

Change 01/08

U2100
MT6732

Pin	Signal	Net
A29	GPIO_0/MSDC0_CLK	eMMC_CLK (R3301 0)
B31	GPIO_1/MSDC0_CMD	eMMC_CMD
B28	GPIO_2/MSDC0_DAT0	eMMC_DATA_0
B29	GPIO_3/MSDC0_DAT1	eMMC_DATA_1
D29	GPIO_4/MSDC0_DAT2	eMMC_DATA_2
C30	GPIO_5/MSDC0_DAT3	eMMC_DATA_3
D28	GPIO_6/MSDC0_DAT4	eMMC_DATA_4
C29	GPIO_7/MSDC0_DAT5	eMMC_DATA_5
B30	GPIO_8/MSDC0_DAT6	eMMC_DATA_6
D30	GPIO_9/MSDC0_DAT7	eMMC_DATA_7
E28	GPIO_10/MSDC0_RSTB	MSM_RESOUT_N
A30	GPIO_11/MSDC0_DSL	eMMC_DSL
G1	GPIO_12/MSDC1_CLK/MD32_JTAG_TCK	SDCARD_CLK (TP2203)
H4	GPIO_13/MSDC1_CMD/MD32_JTAG_TMS	SDCARD_CMD
H3	GPIO_14/MSDC1_DAT0/MD32_JTAG_TDI	SDCARD_DATA_0
G4	GPIO_15/MSDC1_DAT1/MD32_JTAG_TDO	SDCARD_DATA_1
H2	GPIO_16/MSDC1_DAT2/MD32_JTAG_TRST	SDCARD_DATA_2
G2	GPIO_17/MSDC1_DAT3	SDCARD_DATA_3
J1	GPIO_18/MD1_SIM1_SCLK/MD2_SIM1_SCLK/MD1_SIM2_SCLK	SIM1_CLK
J5	GPIO_19/MD1_SIM1_SRST/MD2_SIM1_SRST/MD1_SIM2_SRST	SIM1_RESET_N
J4	GPIO_20/MD1_SIM1_SIO/MD2_SIM1_SDAT/MD1_SIM2_SIO	SIM1_DATA
W3	GPIO_21/MD1_SIM2_SCLK/MD2_SIM2_SCLK/MD1_SIM1_SCLK	SIM2_CLK
W4	GPIO_22/MD1_SIM2_SRST/MD2_SIM2_SRST/MD1_SIM1_SRST	SIM2_RESET_N
W2	GPIO_23/MD1_SIM2_SIO/MD2_SIM2_SDAT/MD1_SIM1_SIO	SIM2_DATA
AC2	GPIO_24/AUD_CLK_MOSI	AUDIO_CLK
AB2	GPIO_25/AUD_DAT_MISO/VOW_DAT_MISO/AUD_DAT_MOSI	AUDIO_DATA_MISO
AB1	GPIO_26/AUD_DAT_MOSI/VOW_DAT_MISO/AUD_DAT_MISO	AUDIO_DATA_MOSI
AB3	GPIO_38/PWRAP_SPI0_CK	PMIC_SPI_SCK
AD5	GPIO_39/PWRAP_SPI0_CSN	PMIC_SPI_CS
AC5	GPIO_40/PWRAP_SPI0_MI/PWRAP_SPI0_MO	PMIC_SPI_MISO
AB5	GPIO_41/PWRAP_SPI0_MO/PWRAP_SPI0_MI	PMIC_SPI_MOSI
AD2	GPIO_42/WATCHDOG	WATCHDOG_RESET_OUT
Y2	GPIO_43/SRCLKENA0	SR_CLK_EN_0
AA2	GPIO_44/SRCLKENA1	SR_CLK_EN_1
AG1	GPIO_27/DISP_PWM	LCD_VSYNC (R2209 DNI) — Changed Net name 02/09
AE2	GPIO_28/LCM_RST	LCD_RESET_N
AE1	GPIO_29/DSI_TE	LCD_VSYNC
AC26	GPIO_30/CAM_CLK0/TDD_TCK	MAIN_CAM0_MCLK
AD28	GPIO_31/CAM_RST0/TDD_TMS	SUB_CAM0_MCLK
AD27	GPIO_32/CAM_RST1/PWM_C/AGPS_SYNC/TDD_TDI	CHG_EN_SET
AD29	GPIO_33/CAM_PDN0/UCTS2/UCTS3/TDD_TDO	VT_CAM_RESET_N
AC30	GPIO_34/CAM_PDN1/URTS2/URTS3/TDD_TRSTN (TP2204)	
AC27	GPIO_35/CMPCLK/CMCSK/TDD_TXD	CHARGER_IRQ_B
AC29	GPIO_36/CMDAT0/CMCSD0/PTA_RXD	EAR_SENSE_JACK
AC28	GPIO_37/CMDAT1/CMCSD1/PTA_TXD	ACCEL_INT
T30	GPIO_45/SCL0	TOUCH_I2C_SCL
R30	GPIO_49/SDA0	TOUCH_I2C_SDA
R28	GPIO_46/SCL1	SENSOR0_I2C_SCL
R29	GPIO_50/SDA1	SENSOR0_I2C_SDA
R26	GPIO_47/SCL2/SCL3_1	COMMON_I2C_SCL
R27	GPIO_51/SDA2/SDA3_1	COMMON_I2C_SDA
T27	GPIO_48/SCL3/SCL2_1	CAM0_I2C_SCL
T28	GPIO_52/SDA3/SDA2_1	CAM0_I2C_SDA
AK22	GPIO_53/RFIC0_BSI_EN/MD2_BSI_EN	RFIC0_BSI_EN
AG22	GPIO_54/RFIC0_BSI_CK/MD2_BSI_CK	RFIC0_BSI_CLK
AH22	GPIO_55/RFIC0_BSI_D0/MD2_BSI_D0	RFIC0_BSI_DATA_0
AH21	GPIO_56/RFIC0_BSI_D1/MD2_BSI_D1	RFIC0_BSI_DATA_1
AG21	GPIO_57/RFIC0_BSI_D2/MD2_BSI_D2	RFIC0_BSI_DATA_2
AJ20	GPIO_58/RFIC1_BSI_EN/PCM1_CLK/MD2_BSI_EN	
AF21	GPIO_59/RFIC1_BSI_CK/PCM1_SYNC/MD2_BSI_CK	
AJ21	GPIO_60/RFIC1_BSI_D0/PCM1_DI/MD2_BSI_D0	
AK20	GPIO_61/RFIC1_BSI_D1/PCM1_DO/MD2_BSI_D1	
AL20	GPIO_62/RFIC1_BSI_D2/UTXD2/MD2_BSI_D2	
AK5	GPIO_63/MISC_BSI_CK	LTE_MIPI0_SCLK
AK4	GPIO_64/MISC_BSI_DO	LTE_MIPI0_SDATA
AK2	GPIO_65/MISC_BSI_DI/MIPI1_SDATA	LTE_MIPI1_SDATA
AJ3	GPIO_66/MISC_BSI_CS0B/MISC_BSI_CS1B/MIPI1_SCLK	LTE_MIPI1_SCLK
AK3	GPIO_67/MISC_BSI_CS1B/MISC_BSI_CS0B/MIPI1_SCLK	
AG26	GPIO_68/BPI_BUS0/MSDC2_CLK/MD2_BPI_BUS0	GPS_LNA_EN
AH27	GPIO_69/BPI_BUS1/MSDC2_CMD/MD2_BPI_BUS1	ANT1_MS_DETECTION (Added Net name 2/2)
AJ27	GPIO_70/BPI_BUS2/MSDC2_DAT0/MD2_BPI_BUS2	ANT2_MS_DETECTION
AK27	GPIO_71/BPI_BUS3/MSDC2_DAT1/MD2_BPI_BUS3	
AK26	GPIO_72/BPI_BUS4/MSDC2_DAT2/MD2_BPI_BUS4	
AJ26	GPIO_73/BPI_BUS5/MSDC2_DAT3/MD2_BPI_BUS5	
AH26	GPIO_74/BPI_BUS6/ANT_SEL0/MD2_BPI_BUS6	GRFC_6
AH25	GPIO_75/BPI_BUS7/ANT_SEL1/MD2_BPI_BUS7	GRFC_7
AG25	GPIO_76/BPI_BUS8/ANT_SEL2/MD2_BPI_BUS8	
AJ25	GPIO_77/BPI_BUS9/MD2_BPI_BUS9	GRFC_8
AJ24	GPIO_78/BPI_BUS10/MD2_BPI_BUS10	GRFC_9
AG24	GPIO_79/BPI_BUS11/MD2_BPI_BUS11	
AH23	GPIO_80/BPI_BUS12/MD2_BPI_BUS12	(TP2222)
AJ23	GPIO_81/BPI_BUS13/MD2_BPI_BUS13	
AK25	GPIO_82/BPI_BUS14/MD2_BPI_BUS14	GRFC_14
AL6	GPIO_83/BPI_BUS15/MD2_BPI_BUS15	
AJ8	GPIO_84/BPI_BUS16/MD2_BPI_BUS16	
AH8	GPIO_85/BPI_BUS17/MD2_BPI_BUS17	
AG7	GPIO_86/BPI_BUS18/MD2_BPI_BUS18	
AH7	GPIO_87/BPI_BUS19/MD2_BPI_BUS19	PCB_INDICATOR_0
AJ7	GPIO_88/BPI_BUS20/MD2_BPI_BUS20	PCB_INDICATOR_1
AK7	GPIO_89/BPI_BUS21/MD2_BPI_BUS21	PCB_INDICATOR_2
AK6	GPIO_90/BPI_BUS22/MD2_BPI_BUS22	PCB_INDICATOR_3
AL5	GPIO_91/BPI_BUS23/MD2_BPI_BUS23	
AJ6	GPIO_92/BPI_BUS24/MD2_BPI_BUS24	Delete Net name 2/2
AH6	GPIO_93/BPI_BUS25/MD2_BPI_BUS25	
AG5	GPIO_94/BPI_BUS26/MD2_BPI_BUS26	
AH5	GPIO_95/BPI_BUS27/MD2_BPI_BUS27	
AL3	GPIO_96/LTE_TXBPI/RF_DCCAL_RESULT_IN	RFIC0_TX_BPI
AK23	URXD2/RF_DCCAL_RESULT_IN_OGT/TD_TXBPI/GPIO_97	
J29	MSDC3_CLK/WB_CTRL0/GPIO_98	WB_CTRL_0
J28	MSDC3_CMD/WB_CTRL1/GPIO_99	WB_CTRL_1
K28	MSDC3_DAT0/WB_CTRL2/GPIO_100	WB_CTRL_2
L29	MSDC3_DAT1/WB_CTRL3/GPIO_101	WB_CTRL_3
L28	MSDC3_DAT2/WB_CTRL4/GPIO_102	WB_CTRL_4
M28	MSDC3_DAT3/WB_CTRL5/GPIO_103	WB_CTRL_5
L27	PCM0_DO/MRG_DO/WB_SCLK/GPIO_106	CONN_SPI_CLK
M27	PCM0_SYNC/MRG_SYNC/WB_SDATA/GPIO_107	CONN_SPI_DATA
P30	URXD3/UTXD3/WB_SEN/GPIO_108	CONN_SPI_EN
N30	UTXD3/URXD3/WB_RSTB/GPIO_109	CONN_RSTB
AG2	KPCOL0/GPIO_110 (TP2216)	
AF2	SCL3_2/SCL2_2/KPCOL1/GPIO_111	KEYPAD_SENSE_2
AF3	KPROW0/GPIO_112	
AG3	SDA3_2/SDA2_2/KPROW1/GPIO_113 (TP2202)	
W31	SCL3_3/SCL1_1/DPI_D0/GPIO_114	BAT_ID
W30	SDA3_3/SDA1_1/DPI_D1/GPIO_115	TOUCH_INT_N
Y28	UCTS1/DPI_D2/GPIO_116	
Y30	URTS1/DPI_D3/GPIO_117	DSV_ENN
Y27	SPI2_CSB/DPI_D4/GPIO_118	
AA27	ANT_SEL3/SPI2_CLK/DPI_D5/GPIO_119	TOUCH_RESET
AA30	ANT_SEL4/SPI2_MO/DPI_D6/GPIO_120	
AB31	ANT_SEL5/SPI2_MI/DPI_D7/GPIO_121	
AB30	AUD_DAT_MISO_SPK_A/I2S2_MCK/DPI_D8/GPIO_122	BAT_ID_PULLUP
V29	MD_CDMA_GPS_SYNC/I2S2_BCK/DPI_D9/GPIO_123	MAIN_CAM0_RESET_N
W28	I2S2_LRCK/DPI_D10/GPIO_124	HALL_INT
AB29	SRCLKENA0/I2S2_DI/DPI_D11/GPIO_125	SDCARD_DET
Y31	AUD_DAT_MISO_SPK_A/I2S2_MCK/DPI_DE/GPIO_126	
W29	I2S2_BCK/DPI_CK/GPIO_127	FLASH_CNTL_EN
W27	DBG_SCL/I2S2_LRCK/DPI_HSYNC/GPIO_128	FLASH_TX
V26	DBG_SDA/I2S2_DO/DPI_VSYNC/GPIO_129 (TP2201)	
V30	UTXD2/URXD2/I2S0_MCK/GPIO_130	PROXIMITY_INT
U30	URXD2/UTXD2/I2S0_BCK/GPIO_131	
T31	MD_INT2/I2S0_LRCK/GPIO_132	Delete Net name 01/08
U31	SRCLKENA0/AGPS_SYNC/I2S0_DI/GPIO_133	MT6311_INT
V28	UTXD0/URXD0/I2S1_MCK/GPIO_134	URXD0
V27	URXD0/UTXD0/I2S1_BCK/GPIO_135	UTXD0
U27	UTXD1/URXD1/I2S1_LRCK/GPIO_136	Delete Net name 01/08
U26	URXD1/UTXD1/I2S1_DO/GPIO_137	Delete Net name 01/08
AH3	URXD3/UTXD3/SRCLKENAI/GPIO_138	Delete Net name 01/08
AH2	UYXD3/URXD3/PWM_A/GPIO_139	COMPASS_INT
Y4	ANT_SEL1/MD_INT0/INT_SIM1/GPIO_140	LCD_BL_EN
Y5	ANT_SEL2/MD_INT1/INT_SIM2/GPIO_141	DSV_ENP
AB4	UCTS0/KPCOL2/IDDIG/GPIO_142	KEYPAD_SENSE_0
AA1	URTS0/KPROW2/DRVBUS/GPIO_143	VT_CAM_MAKER_ID (Added Net name 12/18)
AJ1	PWM_B/I2S2_MCK/SPI_CSB/GPIO_144	
AL2	AUD_DAT_MISO_SPK_C/I2S2_BCK/SPI_CLK/GPIO_145	
AH1	SPI_MI/I2S2_LRCK/SPI_MO/GPIO_146	
AJ2	SPI_MO/I2S2_DI/SPI_MI/GPIO_147	
AB28	AUD_DAT_MISO_SPK_B/VOW_CLK_MISO/GPIO_148	VOICE_CLK_MISO
AE30	MIPI_RDN0/GPIO_149	MAIN_CAM0_MIPI_DATA0_N
AE31	MIPI_RDP0/GPIO_150	MAIN_CAM0_MIPI_DATA0_P
AF31	MIPI_RDN1/GPIO_151	MAIN_CAM0_MIPI_DATA1_N
AF30	MIPI_RDP1/GPIO_152	MAIN_CAM0_MIPI_DATA1_P
AE27	MIPI_RCN/GPIO_153	MAIN_CAM0_MIPI_CLK_N
AE26	MIPI_RCP/GPIO_154	MAIN_CAM0_MIPI_CLK_P
AF29	MIPI_RDN2/GPIO_155	MAIN_CAM0_MIPI_DATA2_N
AF28	MIPI_RDP2/GPIO_156	MAIN_CAM0_MIPI_DATA2_P
AG30	MIPI_RDN3/GPIO_157	MAIN_CAM0_MIPI_DATA3_N
AH30	MIPI_RDP3/GPIO_158	MAIN_CAM0_MIPI_DATA3_P
AJ31	CMCSD2/CMDAT2/MIPI_RDN0_A/GPIO_159	VT_CAM_MIPI_DATA0_N
AH31	CMCSD3/CMDAT3/MIPI_RDP0_A/GPIO_160	VT_CAM_MIPI_DATA0_P
AJ30	CMDAT4/MIPI_RDN1_A/GPIO_161	VT_CAM_MIPI_DATA1_N
AK30	CMDAT5/MIPI_RDP1_A/GPIO_162	VT_CAM_MIPI_DATA1_P
AG29	CMHSYNC/MIPI_RCN_A/GPIO_163	VT_CAM_MIPI_CLK_N
AH29	CMVSYNC/MIPI_RCP_A/GPIO_164	VT_CAM_MIPI_CLK_P
AJ29	CMDAT6/MIPI_RDN2_A/GPIO_165	
AK29	CMDAT7/MIPI_RDP2_A/GPIO_166	
AL30	CMDAT8/MIPI_RDN3_A/GPIO_167	
AL29	CMDAT9/MIPI_RDP3_A/GPIO_168	
K2	MIPI_TDN3/GPIO_169	LCD_MIPI_DATA3_N
L2	MIPI_TDP3/GPIO_170	LCD_MIPI_DATA3_P
M2	MIPI_TDN2/GPIO_171	LCD_MIPI_DATA2_N
M1	MIPI_TDP2/GPIO_172	LCD_MIPI_DATA2_P
L5	MIPI_TCN/GPIO_173	LCD_MIPI_CLK_N
M5	MIPI_TCP/GPIO_174	LCD_MIPI_CLK_P
N2	MIPI_TDN1/GPIO_175	LCD_MIPI_DATA1_N
N3	MIPI_TDP1/GPIO_176	LCD_MIPI_DATA1_P
N4	MIPI_TDN0/GPIO_177	LCD_MIPI_DATA0_N
M4	MIPI_TDP0/GPIO_178	LCD_MIPI_DATA0_P
P27	PCM0_CLK/MRG_CLK/F2W_DATA/GPIO_104	FM_DATA
P28	PCM0_DI/MRG_DI/F2W_CLK/GPIO_105	FM_CLK
F30	GPS_RXQN/GPIO_179	GPS_RX_Q_N
F31	GPS_RXQP/GPIO_180	GPS_RX_Q_P
G31	GPS_RXIN/GPIO_181	GPS_RX_I_N
G30	GPS_RXIP/GPIO_182	GPS_RX_I_P
L30	WB_RXQN/GPIO_183	WB_RX_Q_N
M30	WB_RXQP/GPIO_184	WB_RX_Q_P
M31	WB_RXIN/GPIO_185	WB_RX_I_N
N31	WB_RXIP/GPIO_186	WB_RX_I_P

LG Electronics

TITLE: LG-H522y

SIZE	DWG NO	REV
A2	PDM NUMBER	Rev

DRAWN BY: User Name — SHEET 2-1-1_MSM8974_DATA — DATE Drawing Date

LGE Internal Use Only

< 2-3-5-1-3_MT6732_POWER >

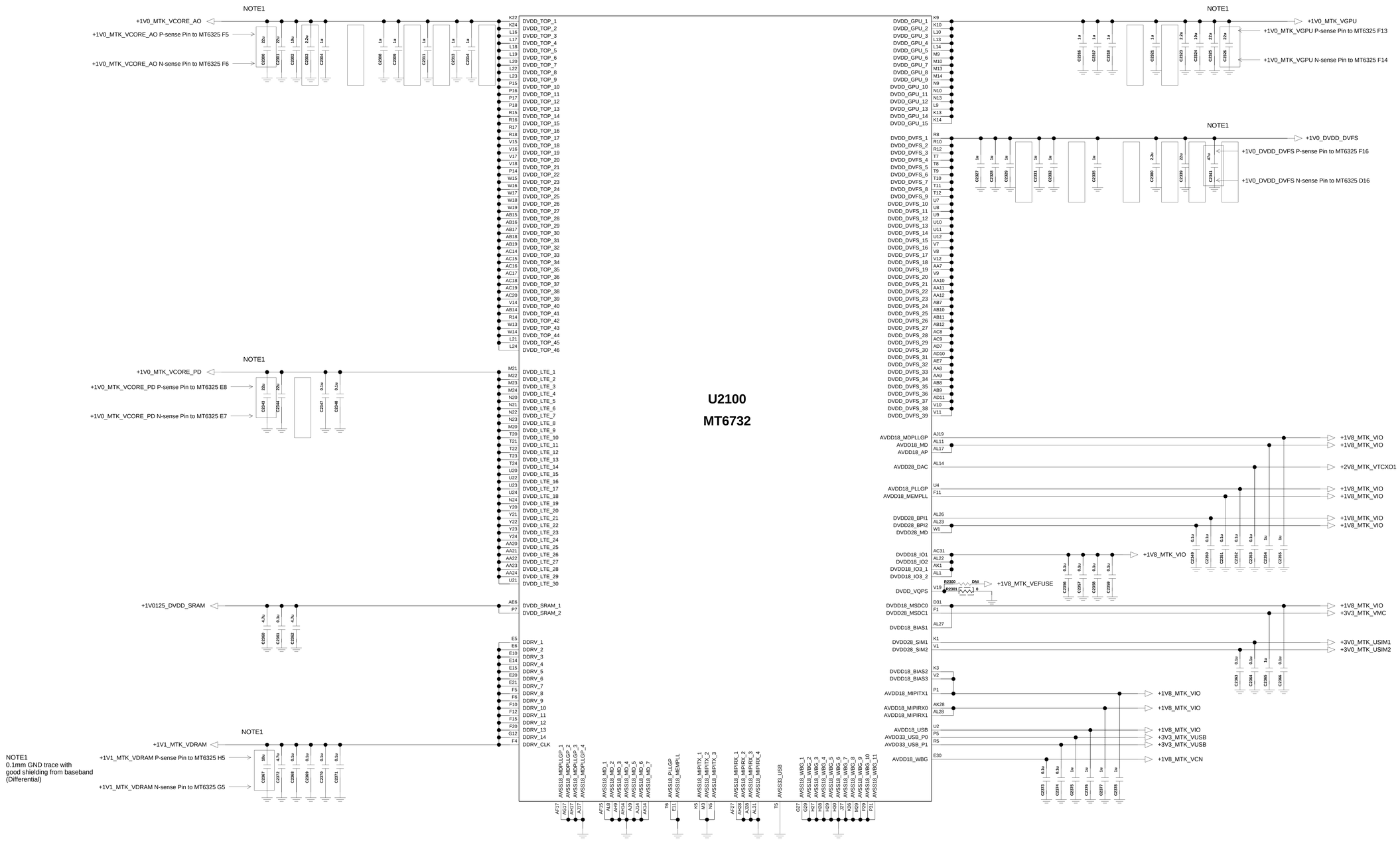

LGE Internal Use Only

LG Electronics	
TITLE	LG-H522y
SIZE A2	DWG NO PDM NUMBER REV Rev
DRAWN BY User Name	SHEET 2-1-1_MSM8974_DATA Drawing Date

< 2-3-5-1-4_MT6732_GND >

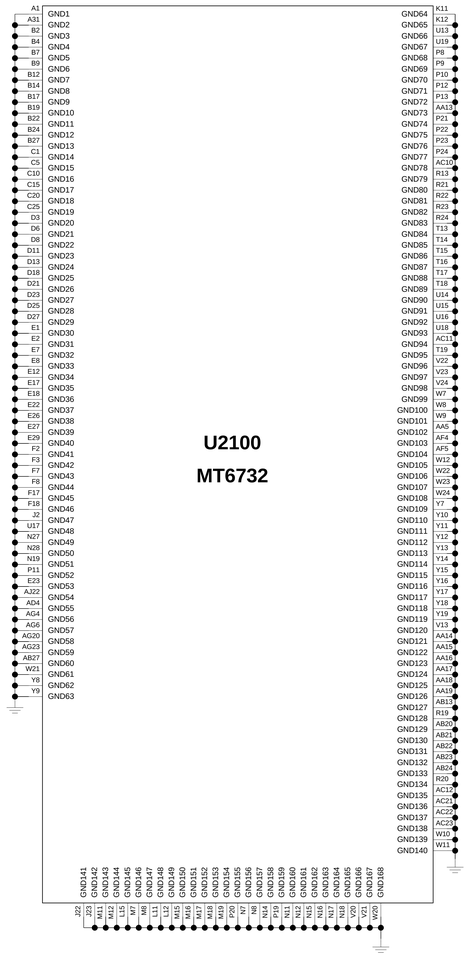

LGE Internal Use Only

	LG Electronics
TITLE	LG-H522y
SIZE A2	DWG NO PDM NUMBER
	REV Rev
DRAWN BY User Name	SHEET 2-1-1_MSM8974_DATA
	DATE Drawing Date

<3_3_3_2_1_MCP_eMMC_v5_0_8G_DDR3_8G_Samsung>

Rev_1.0

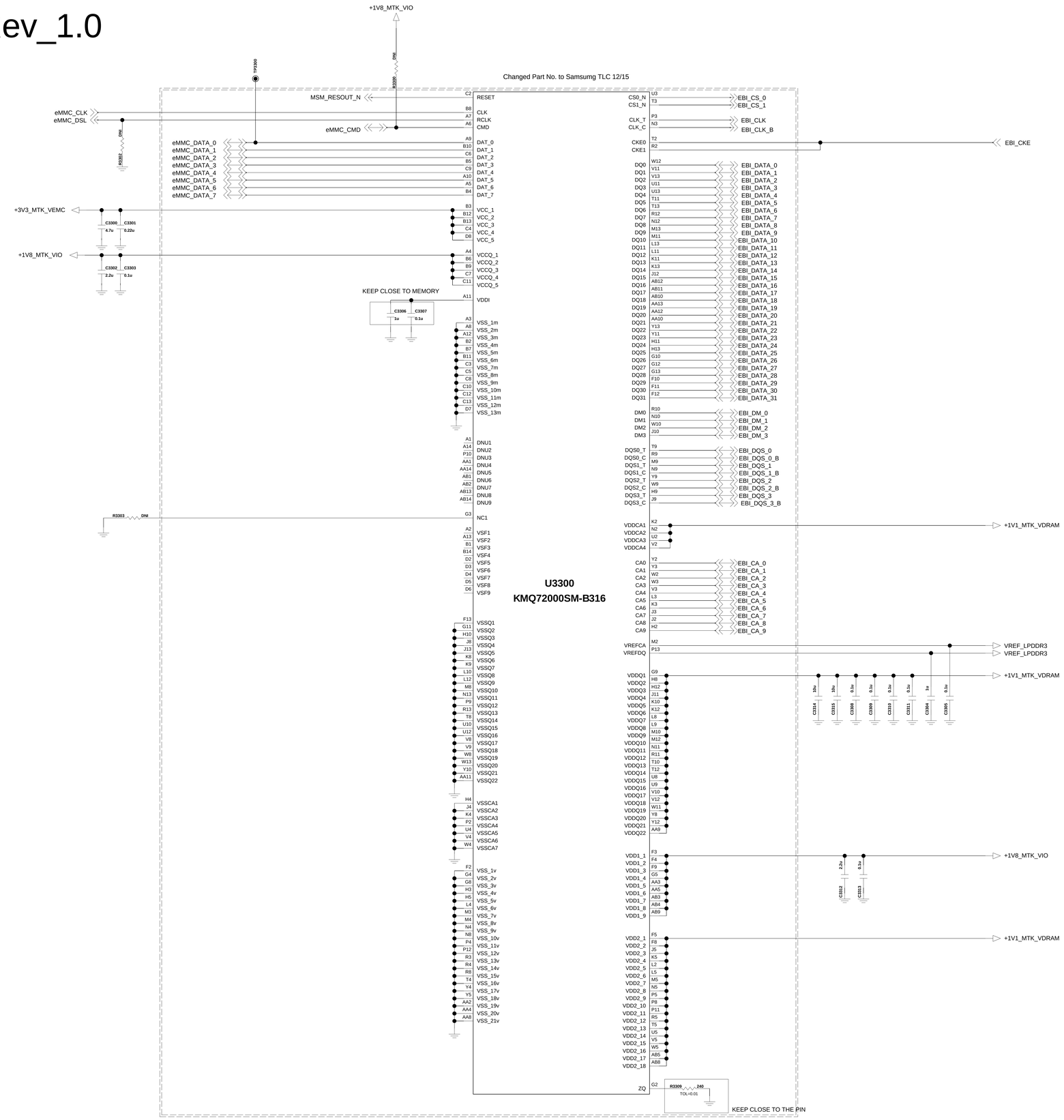

LG Electronics

TITLE: LG-H522y

SIZE: A2 | DWG NO: PDM NUMBER | REV: Rev

SHEET: 2-1-1_MSM8974_DATA | DATE: Drawing Date | DRAWN BY: User Name

LGE Internal Use Only

< 4-1-12-1_PMIC_MT6325_DATA >

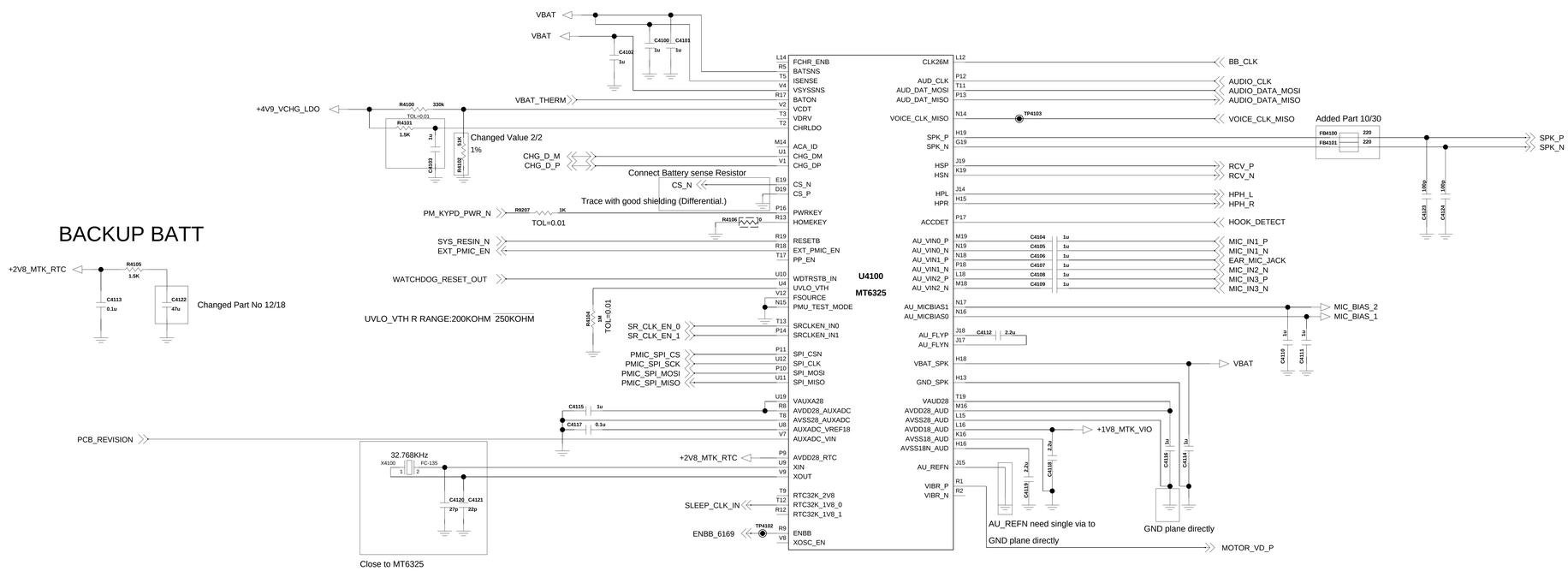

BACKUP BATT

LGE Internal Use Only

LG Electronics	
TITLE	LG-H522y
SIZE A2	DWG NO PDM NUMBER
REV Rev	
DRAWN BY User Name	SHEET 4711_PMIC_PM8226
DATE Drawing Date	

<4-1-12-2_PMIC_MT6325_POWER>

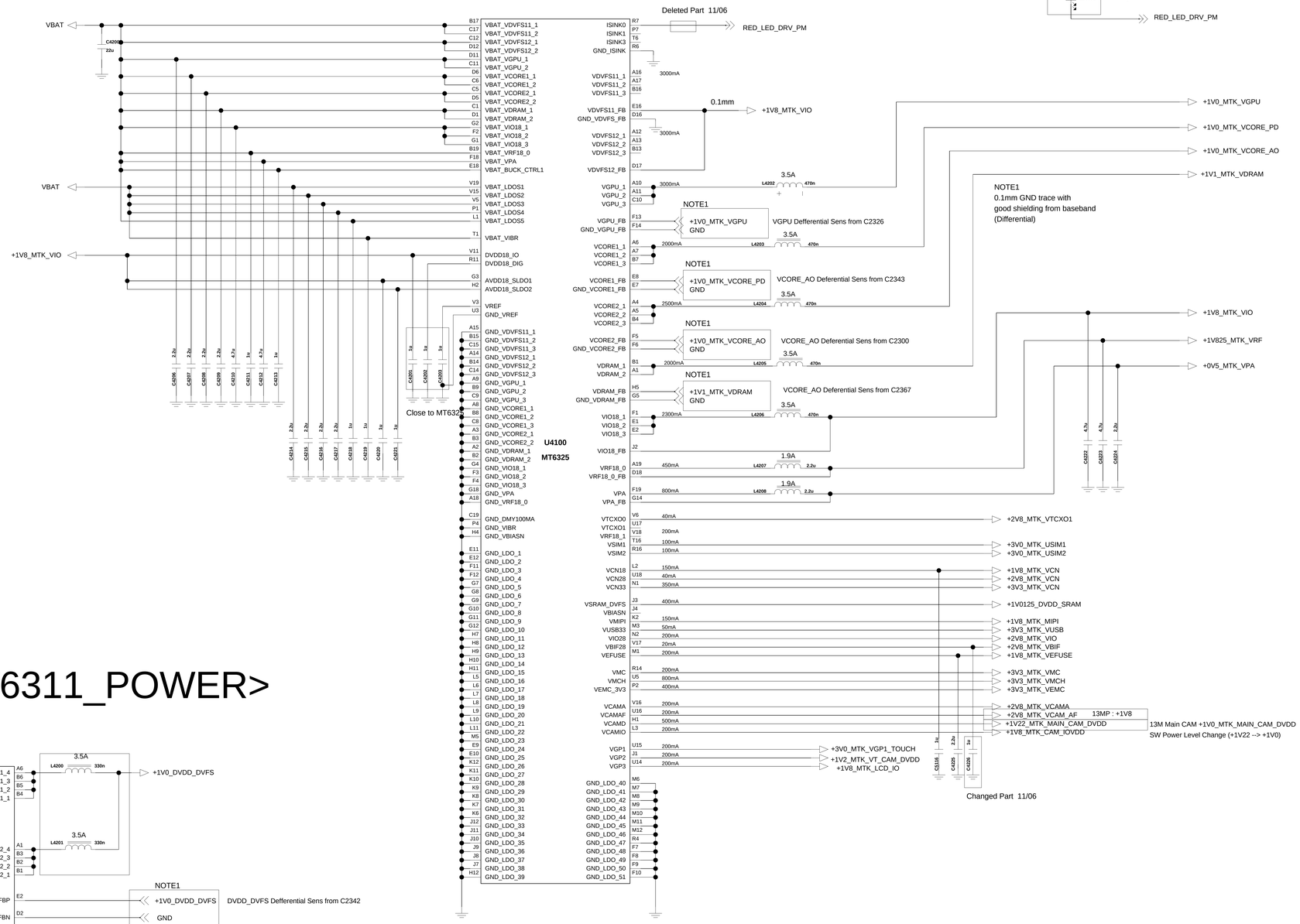

RED LED

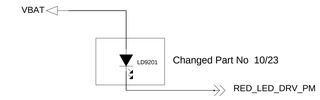

<4-2-7_2'nd PMIC_MT6311_POWER>

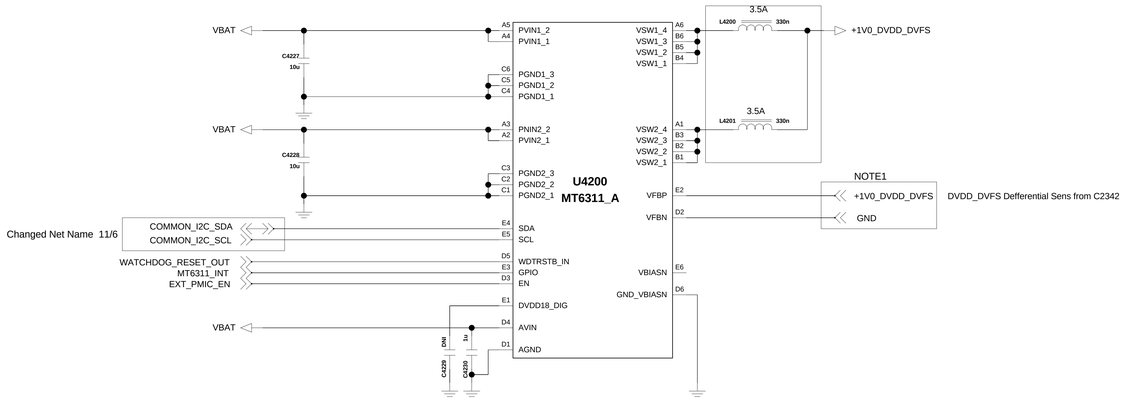

LGE Internal Use Only

LG Electronics	
TITLE	LG-H522y
SIZE A2	DWG NO PDM NUMBER
REV Rev	
DRAWN BY User Name	SHEET 4-1-3-3_PMIC_PM8926_POWER
DATE Drawing Date	

<5-1-1-18_MT6625L_WiFi_BT_GPS_FM>

Rev_0.3

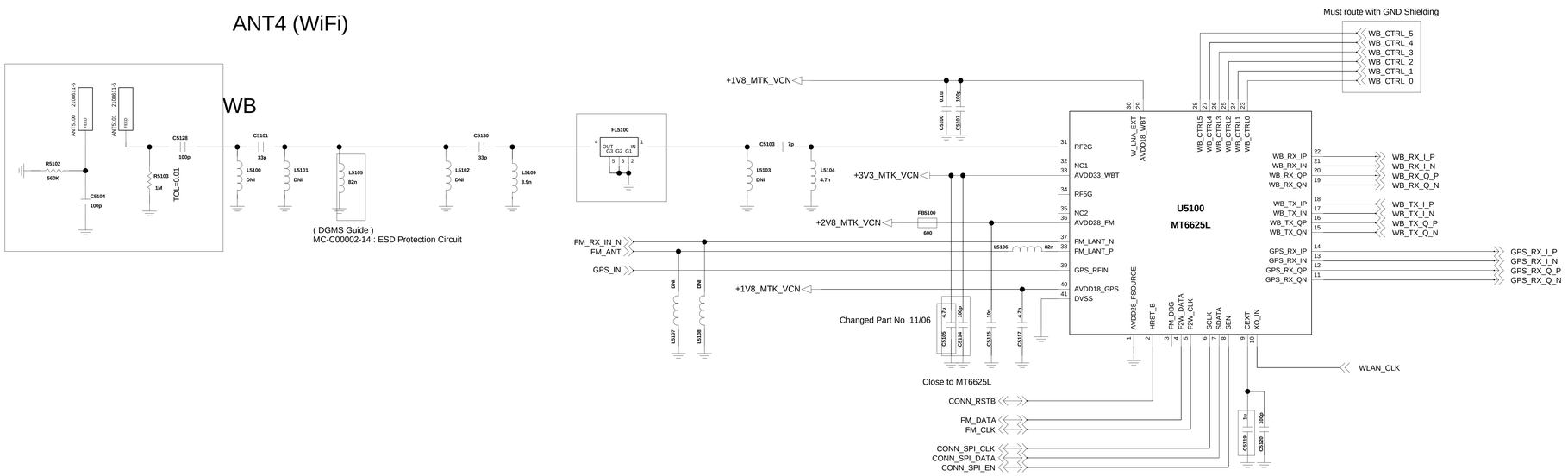

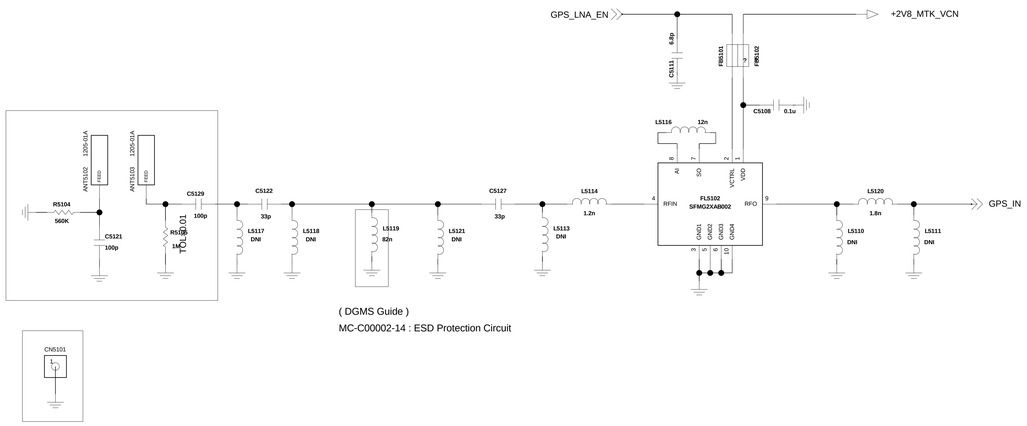

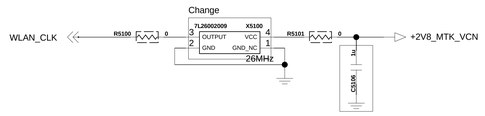

LG Electronics

TITLE: LG-H522y

SIZE: A2 | DWG NO: PDM NUMBER | REV: Rev

Drawn by: User Name | SHEET 8 OF 8 | Date: Drawing Date

LGE Internal Use Only

<7-1-5_LCD_HD> Rev_1.1

JDI 5.0 inch HD Hybrid LCD

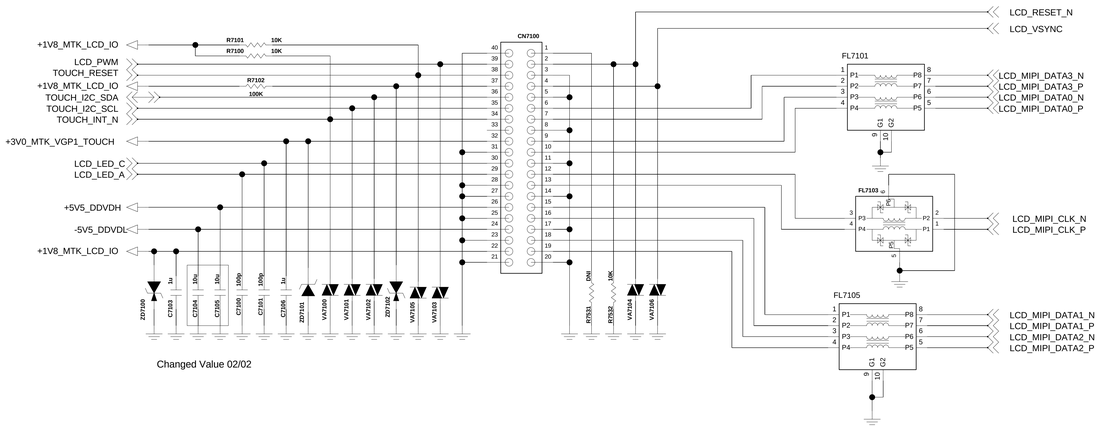

Changed Value 02/02

<4-4-3_LCD_Backlight_IC_RT8542>

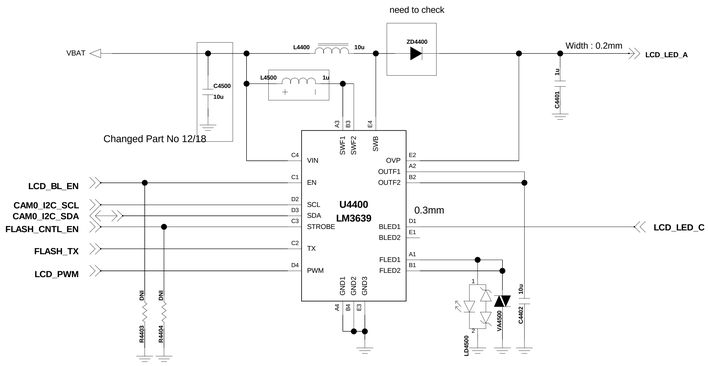

<7-5-8_DSV_DW8768> Rev_0.3

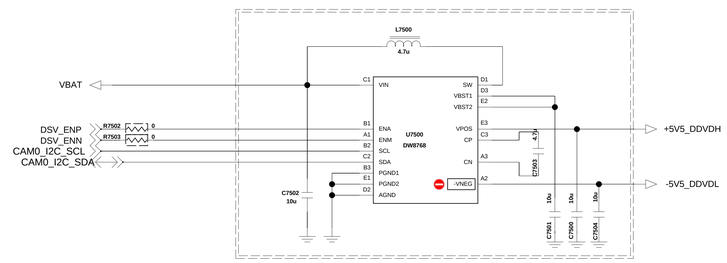

DGMS Guide
MC-C06162-1 : 1. Don't connect Positive of Tantal, TVS diode to Negative voltage if use
2. We recommend MLCC capacitor in this case

<7-3_Main_Camera> Rev_1.0

8MP camera Default

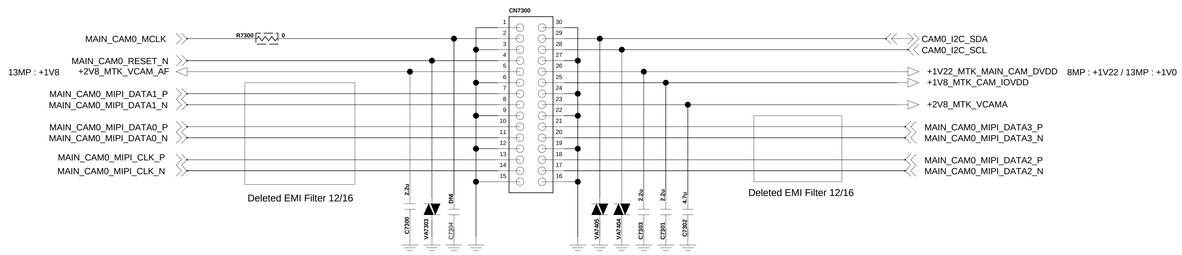

< 7-4-1_VT_Camera_24pin_5M>

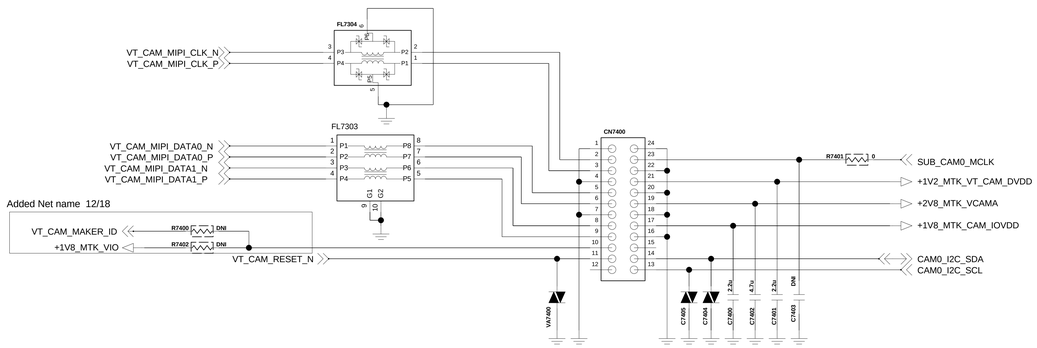

LGE Internal Use Only

LG Electronics	
TITLE	LG-H522y
SIZE A2	DWG NO PDM NUMBER
REV Rev	
DRAWN BY User Name	SHEET 1 of 2
Date Drawing Date	

< 6-6-1_Earjack >

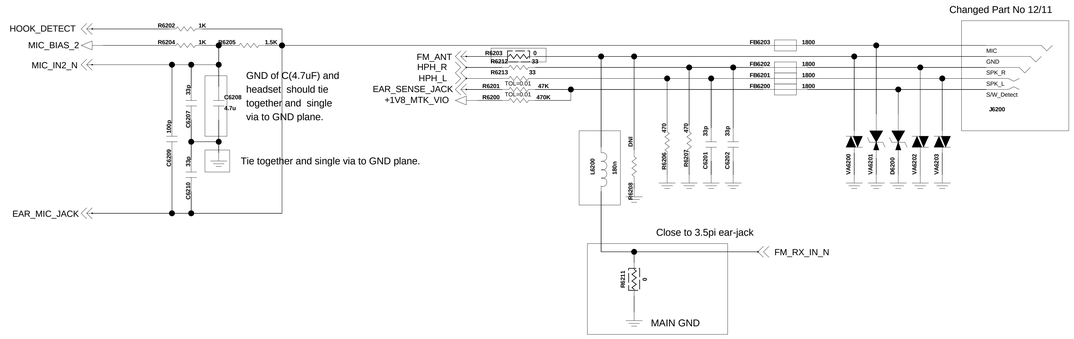

< 6-9-2_2MIC > Rev_0.4

MAIN_MIC

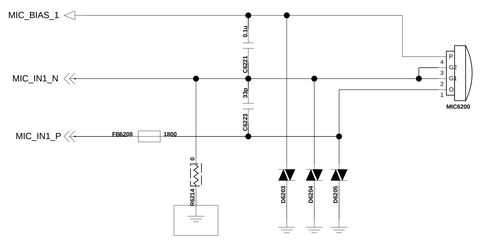

(DGMS Guide)
MC-C00074-11 : For ESD Protection / Tuning points
When USE) TVS devices's Working Voltage
must be greater than the Path voltage

SUB_MIC

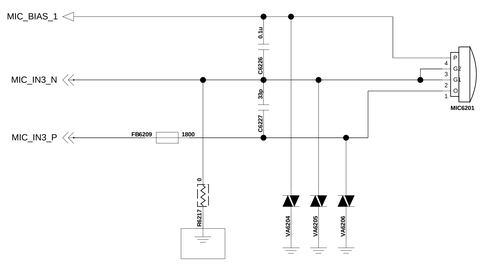

(DGMS Guide)
MC-C00074-11 : For ESD Protection / Tuning points
When USE) TVS devices's Working Voltage
must be greater than the Path voltage

< 6-7-1_Speaker > Rev_0.4

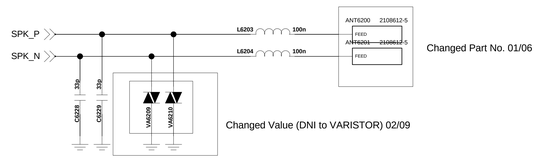

(DGMS Guide)
MC-C04773-8 : For ESD Protection / Tuning points
When USE) TVS devices's Working Voltage must be greater than the Path voltage
should apply capacitor under 50pF value for ESD protection with d-class amp

< 6-8-2_Receiver>
Rev_0.4

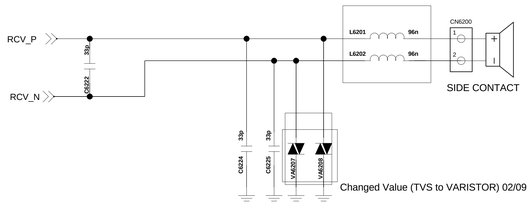

(DGMS Guide)
MC-C04773-8 : For ESD Protection / Tuning points
When USE) TVS devices's Working Voltage
must be greater than the Path voltage

LG Electronics

TITLE LG-H522y

SIZE A2 | DWG NO PDM NUMBER | REV Rev

DRAWN BY User Name | SHEET Sensor 5 | Date Drawing Date

LGE Internal Use Only

<8-1-2-1_Accel_Compass_BMC150> REV_1.0

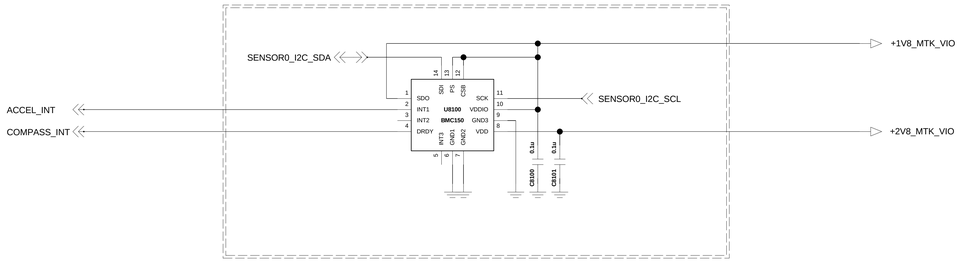

<8-4-1-X_Proximity_RPR-0521>

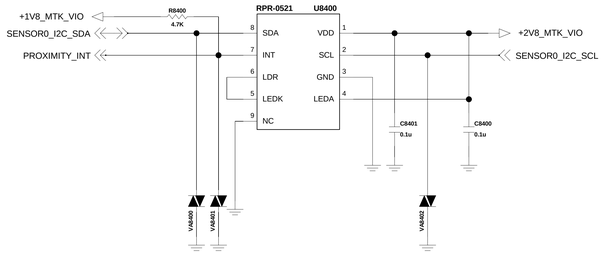

< 9-9-1-1_Motor >

Rev_0.3

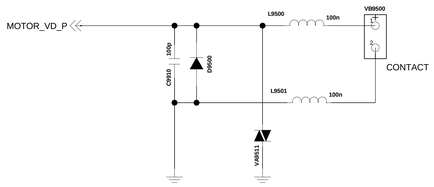

<8-7-1-5_Hall_IC_S5717> Rev_1.1

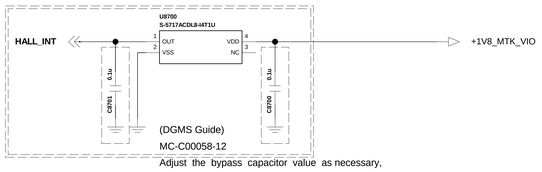

(DGMS Guide)
MC-C00058-12
Adjust the bypass capacitor value as necessary, according to signal line noise conditions

LG Electronics

TITLE LG-H522y

SIZE A2 | DWG NO PDM NUMBER | REV Rev

DRAWN BY User Name | SHEET Sensor of 5 | Date Drawing Date

LGE Internal Use Only

<9-1-2_Battery_CNT_4P> REV.0.6

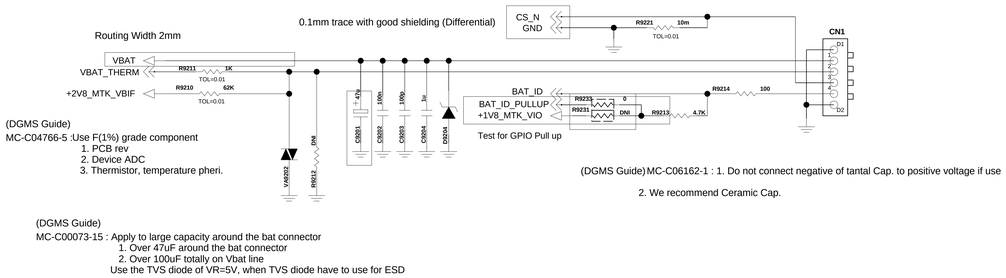

<4-7-1-1_Linear Charger_RT9536> Rev_0.3

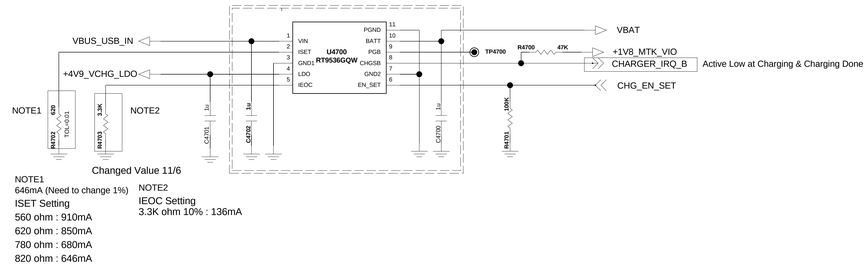

< 9-2-1_IO_USB2.0 > Rev_0.5

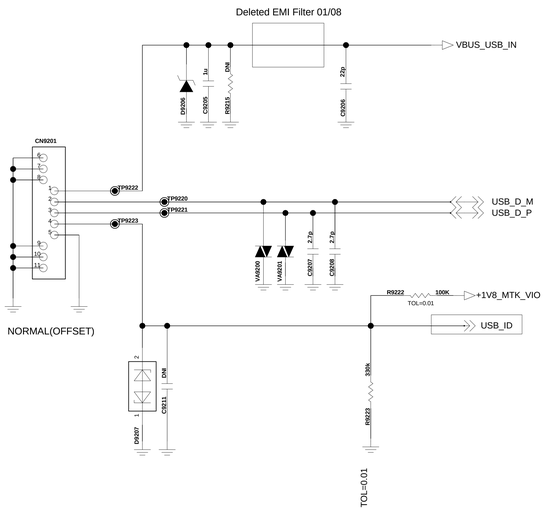

<TOP SHIELD CAN CLIP>

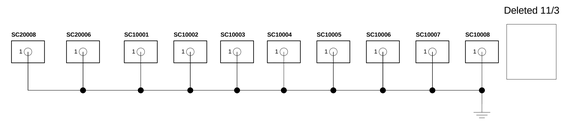

<BOTTOM SHIELD CAN CLIP>

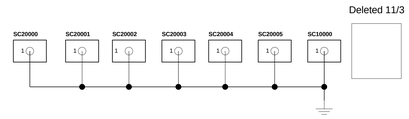

<Coaxial Cable Clip >

<GND Clip >

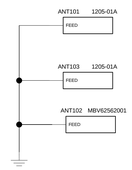

BACK KEY CONNECTOR

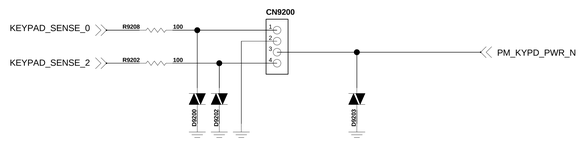

	Sense0-KCOL2	Sense2-KCOL1
GND	UP	DOWN

PID 6x6

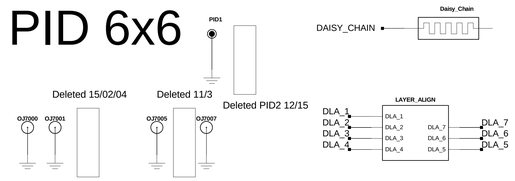

LGE Internal Use Only

LG Electronics

TITLE LG-H522y

SIZE	DWG NO	REV
A2	PDM NUMBER	Rev

DRAWN BY: User Name | SHEET etc OF 19 | Date Drawing Date

< 9-5-3_Micro_SD_Combo >

Main PCB

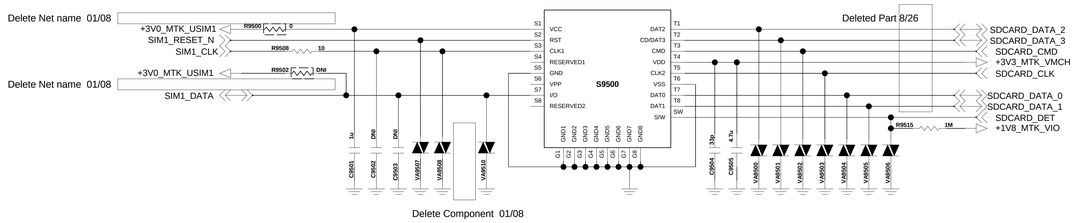

<Dual Sim Connector>

Main PCB

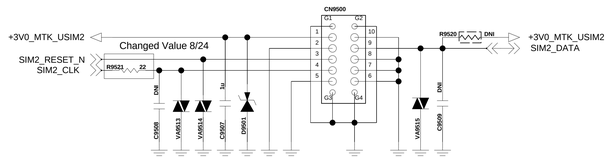

LGE Internal Use Only

LG Electronics

TITLE LG-H522y

SIZE A2 | DWG NO PDM NUMBER | REV Rev

Drawn by User Name | SHEET 31 OF 17 | Date Drawing Date

U2100_MT6732_IC,Digital Baseband Processor(Top View)

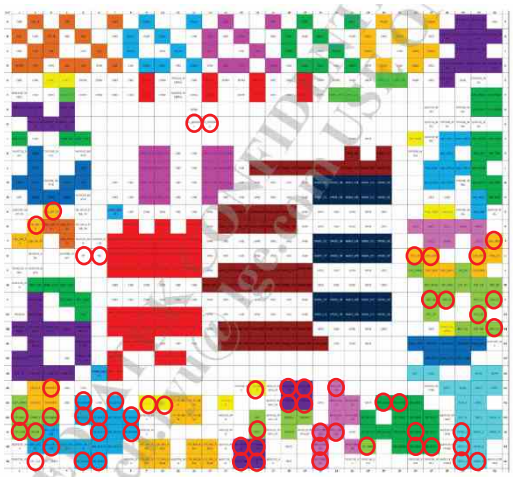

O Not used

U3300_KMQ72000SMB-316,IC,MCP.eMMC4905(Top View)

O Not used

U4100_MT6325_IC,PMIC (Top View)

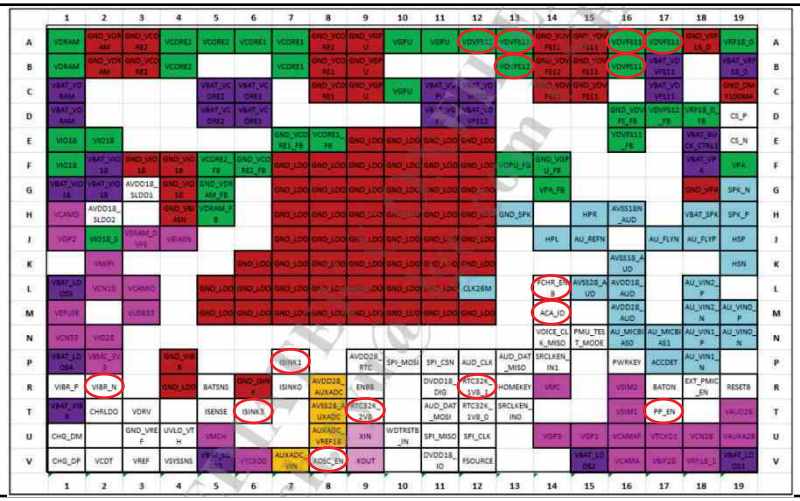

O Not used

U4200_MT6311_IC,2nd PMIC (Top View)

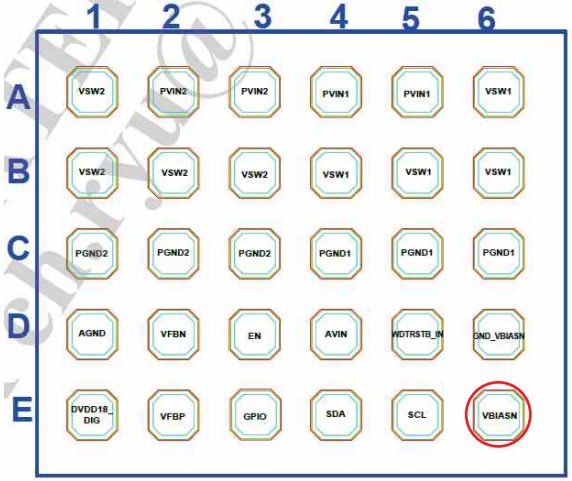

O Not used

Copyright © 2015 LG Electronics. Inc. All right reserved. Only training and service purposes